T: 01438 909168 | F: 01438 369206 | E: sales@luxritesecurity.co.uk
Unit 3, Eastman Way, Pin Green Industrial Estate, Stevenage, Hertfordshire, SG1 4SZ

SPRO

BASE01-W

Junction Box

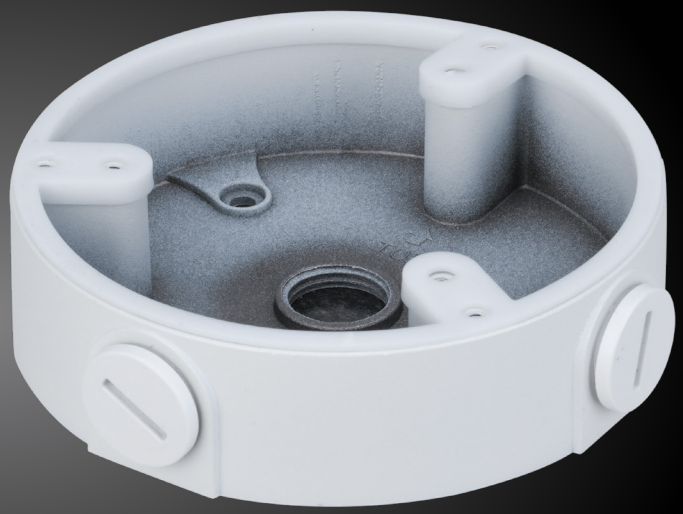

SPECIFICATIONS

Model Number	BASE01-W
Material	Aluminum
Dimensions	Φ122.0mmx34.2mm (Φ4.80"x1.35")
Colour	White
Net Weight	0.24kg(0.53lb)
Load Bearing	1.0 kg (2.2 lb)
Inch Thread	M20(G1/2")
Operating Temperature	-40°C~+60°C(-40°F~+140°F)
Operating Humidity	<90% (RH)
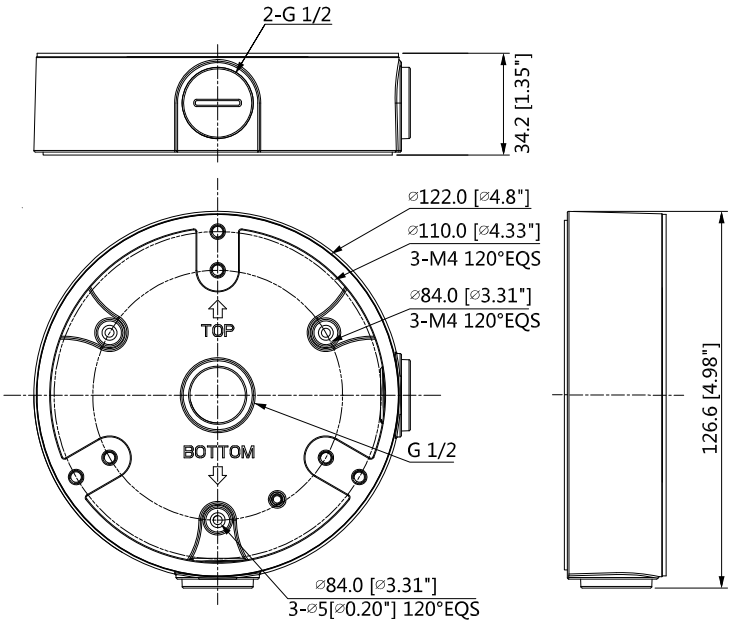
Dimensions (mm[inch])